Button | E23161-75BKGLD

Job Name:_____ Job Type:_____ Quantity:_____ Comments:_____

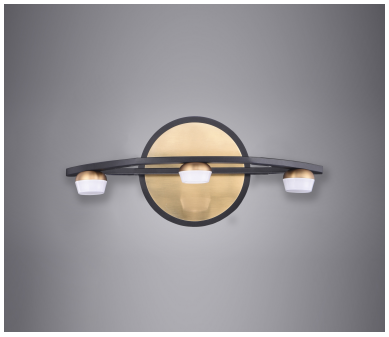

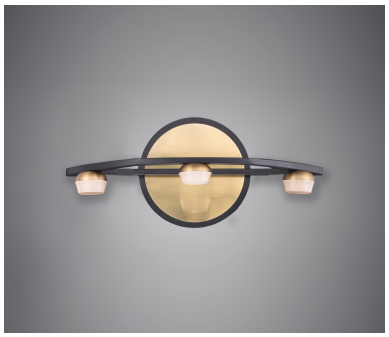

PRODUCT DESCRIPTION

Black Frames suspend Gold painted cups with Opal White diffusers. The integrated LED offers ample light from a small aperture light source. The pendants feature offset rings to bring interest to the overall shape.

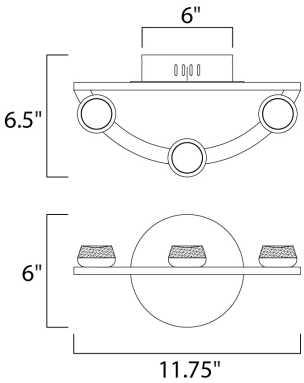

MEASUREMENTS

DIMENSION	: 11.75" W x 6" H x 6.5" Ext
BACK PLATE	: 6" W x 6" H x 3" HCO
HANGING WEIGHT	: 2.2 lb

LAMPING

INPUT VOLTAGE	: 120V
LUMENS	: 504 Rated (270 Del.)
BULB	: 3 x 2.4W LED PCB Integrated , 7W Total
BULB INCLUDED	: (Integrated)
DIMMABLE	: Triac CL
CRI	: 80+ CRI
COLOR_TEMP	: 3000K
LIGHTING_DIRECTION	: Up/Down

FINISHES OPTION

Black / Gold (BKGLD)

GLASS

Clear Acrylic 75

MATERIAL

Steel, Aluminum

RATINGS

cETLus
Damp Location

ADDITIONAL

INSTALL UP/DOWN: Up/Down
RATED LIFE 30000 Hours
OPERATING TEMPERATURE:
-20°C (-4°F), 40°C (104°F)

Always consult a qualified electrician before installing any lighting product.

Contemporary Lighting™

WESTERN DISTRIBUTION CENTER (HEADQUARTER)
253 NORTH VINELAND AVE I CITY OF INDUSTRY, CA 91746

EASTERN DISTRIBUTION CENTER
101 GARDNER PARK | PEACHTREE CITY, GA 30269

P. 626.956.4200 I F. 626.956.4225 I maximlighting.com